VFR800 Engine Management System

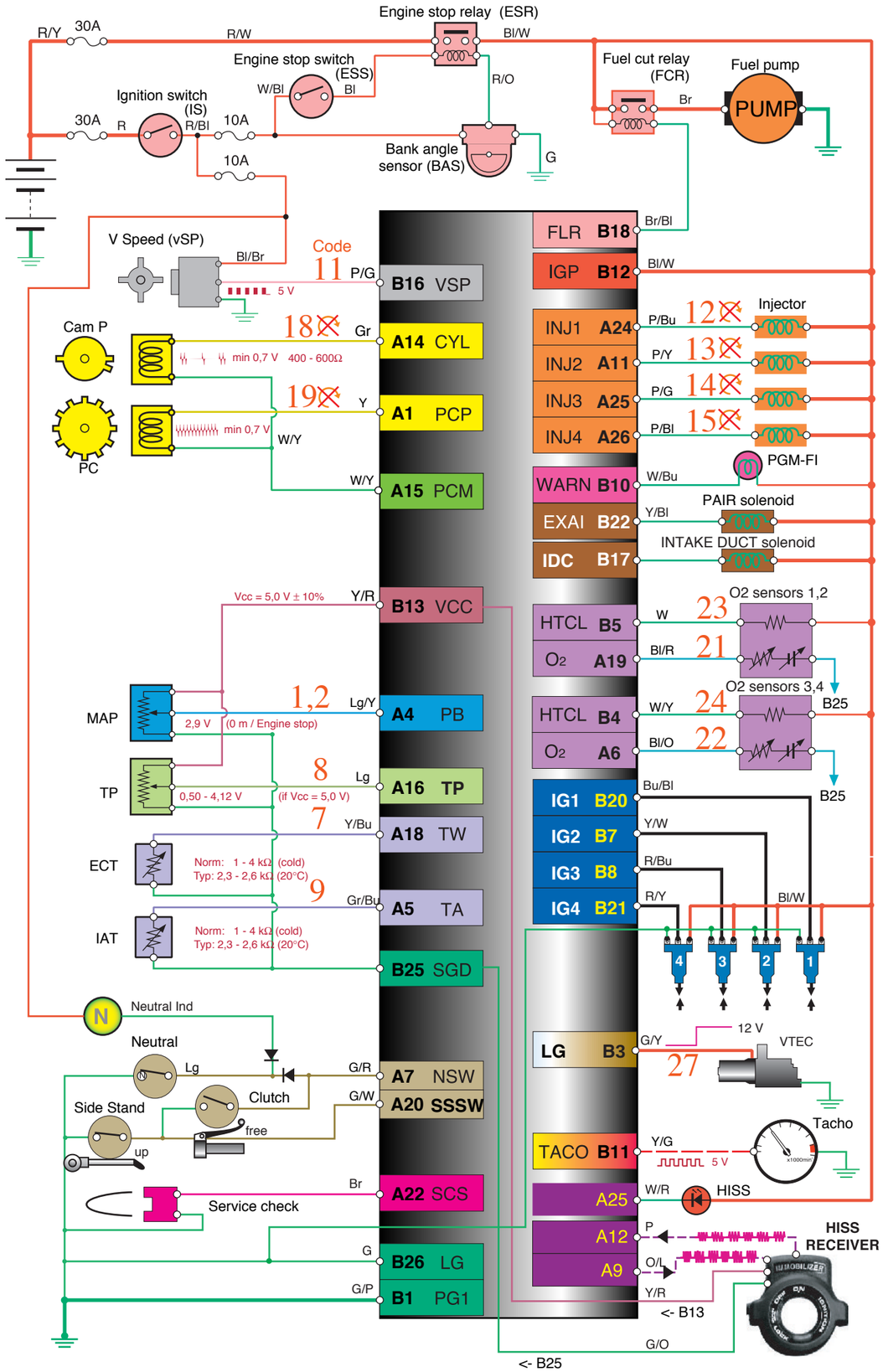

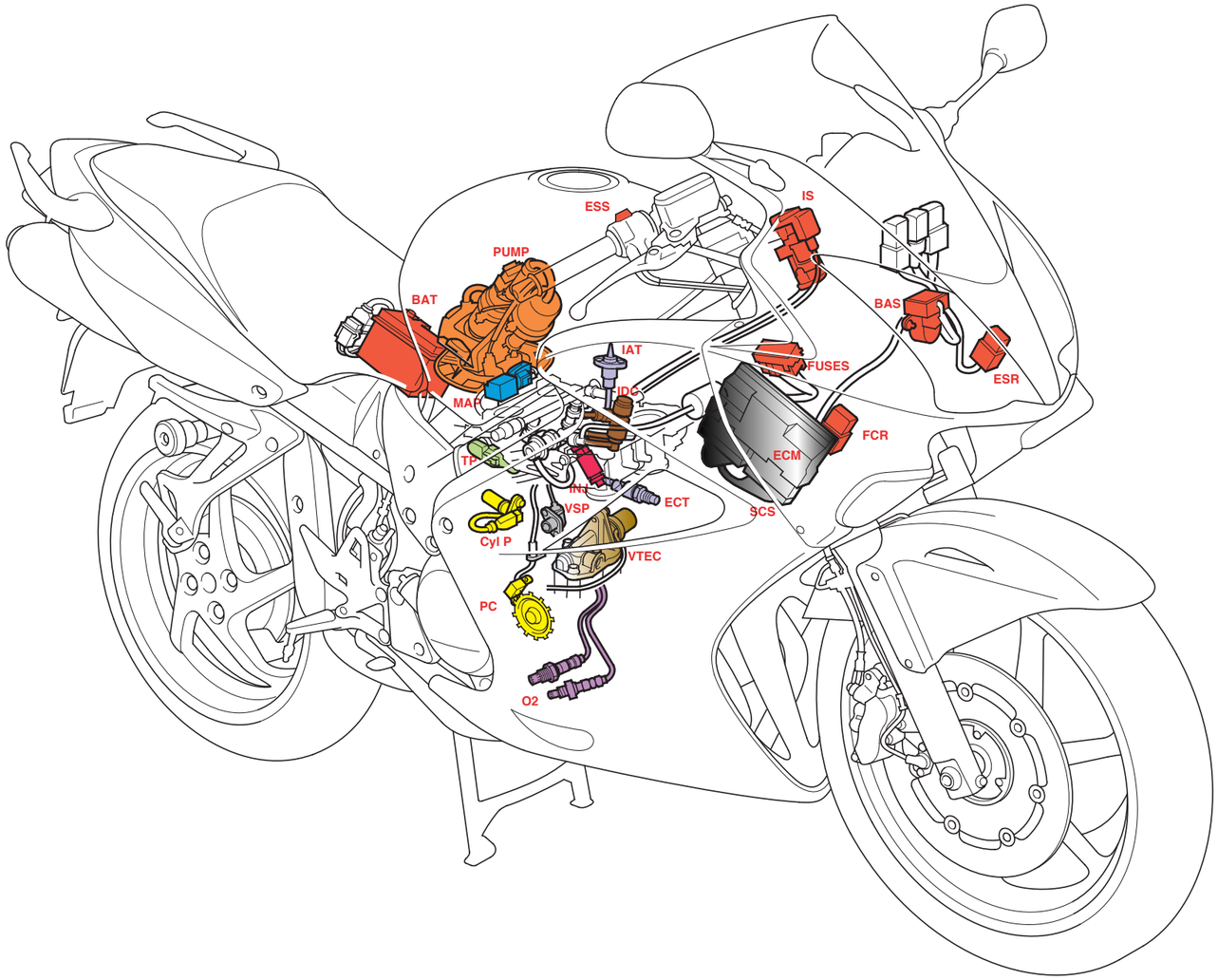

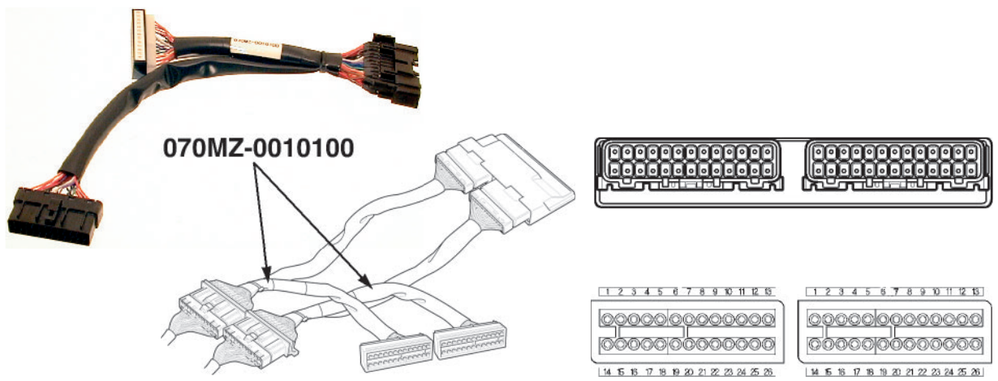

Published by HONDA MOTOR EUROPE Ltd. - TECHNICAL CENTRE - Gent (B) - Diagram: Headoffice Overseas Service Division © 2002